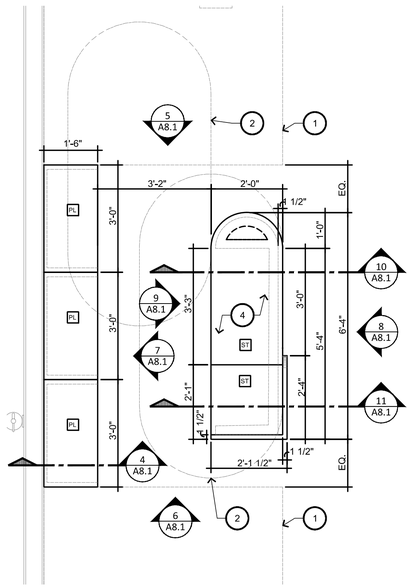

14 ENLARGED SALES COUNTER PLAN

SCALE: 1/2" = 1'-0"

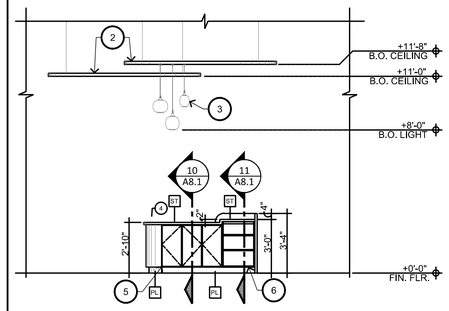

9 P.O.S. ELEVATION

SCALE: 1/4" = 1'-0"

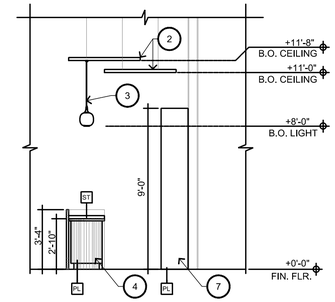

5 P.O.S. ELEVATION

SCALE: 1/4" = 1'-0"

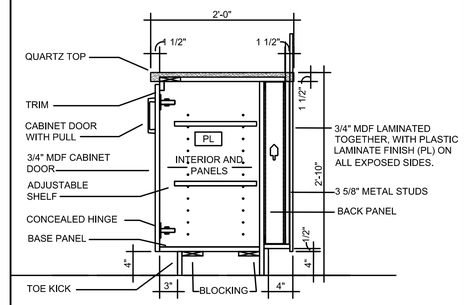

10 SECTION AT COUNTER

SCALE: 1" = 1'-0"

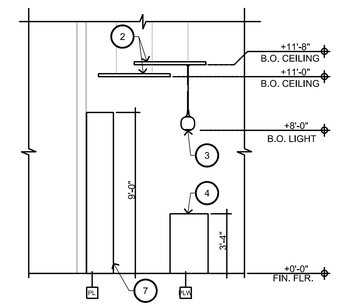

6 P.O.S. ELEVATION

SCALE: 1/4" = 1'-0"

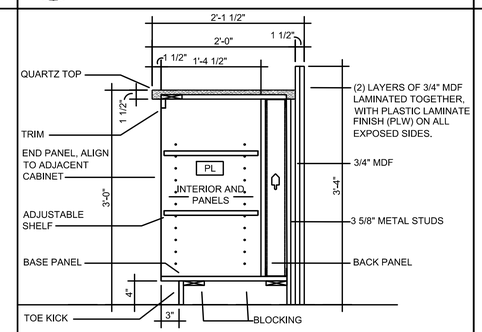

11 SECTION AT COUNTER

SCALE: 1" = 1'-0"

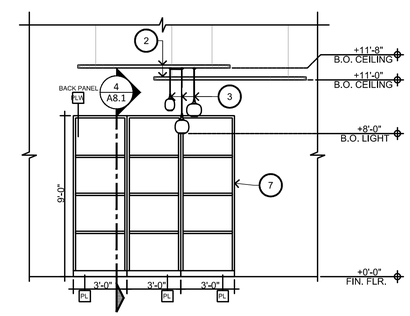

7 PILLOW DISPLAY

SCALE: 1/4" = 1'-0"

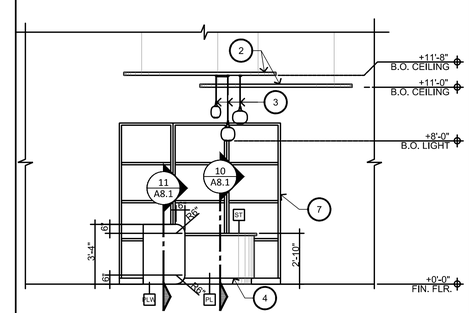

8 P.O.S. ELEVATION

SCALE: 1/4" = 1'-0"

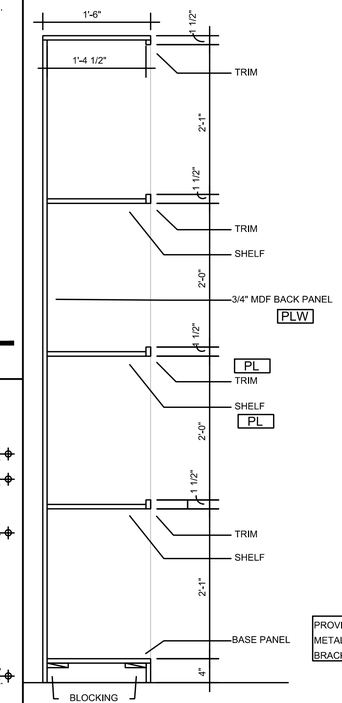

PROVIDE 12 GA. SHEET METAL BACKING AT ALL BRACKET ATTACHMENTS

4 SECTION AT PILLOW DISPLAY

SCALE: 1" = 1'-0"

KEYNOTES

1. DASHED LINE INDICATES MATTRESS LOCATION, REFER TO FLOOR PLAN, A1.0
2. GYP. BOARD SUSPENDED CLOUD REFER TO RCP PLAN, A2.0
3. CEILING PENDANT LIGHTS, REFER TO RCP PLAN A2.1 AND ELECTRICAL DRAWINGS.
4. BASE CABINETS
5. CABINET DOOR.
6. CABINET SHELVING
7. PILLOW DISPLAY FIXTURE.

CABINET FINISH LEGEND (OR EQUAL)

PLASTIC LAMINATE

PL	DESCRIPTION:	STANDARD LAMINATE
	MANUFACTURER:	WILSONART
	COLOR:	8271 'MAPLE PB NUTMEG'
	FINISH:	FINE VELVET FINISH
PLW	DESCRIPTION:	STANDARD LAMINATE
	MANUFACTURER:	WILSONART
	COLOR:	D354 'DESIGNER WHITE'
	FINISH:	01 HIGH GLOSS FINISH

STONE

ST	DESCRIPTION:	QUARTZ STONE TOP
	MANUFACTURER:	WILSONART
	COLOR:	Q1024 'SEA ICE'
	THICKNESS:	TYPE 062 = 0.79"

RKAA
A R C H I T E C T S + I N C
2233 EAST THOMAS ROAD, PHOENIX, ARIZONA 85016
602-955-3900
RKAA.com

REGISTERED ARCHITECT
CERTIFICATE NO. No. 9452
ROBERT W. KUBICEK
Date Signed 11/18/24
ARIZONA, U.S.A.
EXPIRES 06/30/2027

DATE : 05-08-26

2	07/20/26	CITY COMMENTS
1	07/23/26	OWNER COMMENTS

DETAILS

NOTICE OF ALTERNATE BILLING OR PAYMENT CYCLE: THIS CONTRACT MAY ALLOW THE OWNER TO REQUIRE THE SUBMISSION OF BILLINGS OR ESTIMATES IN BILLING CYCLES OTHER THAN THIRTY DAYS. THIS CONTRACT MAY ALLOW OWNER TO MAKE PAYMENT ON SUCH BILLINGS OR ESTIMATES AFTER CERTIFICATION AND APPROVAL OF BILLING AND ESTIMATES. A WRITTEN DESCRIPTION OF SUCH OTHER BILLING CYCLE APPLICABLE TO THE PROJECT IS AVAILABLE FROM OWNER OR DESIGNATED AGENT. NAME: ADDRESS: ADDRESS: CONTACT: Name PHONE:

2

MATTRESS SHOP
PAD 5B - SUITE 1 AT PASEO LINDO SHOPPING CENTER
NEC OF ARIZONA AVE AND OCOTILLO RD.
CHANDLER, AZ

COPYRIGHT 2023, ALL RIGHTS RESERVED. THIS DRAWING IS AN INSTRUMENT OF SERVICE. IT IS THE PROPERTY OF RKAA ARCHITECTS, INC. AND MAY NOT BE USED OR FOR REPRODUCTION HEREOF USED, WITHOUT WRITTEN PERMISSION OF THE CORPORATION.

design by: RH
drawn by: MM
checked by: RH

A8.1 2

project #: 26102.00